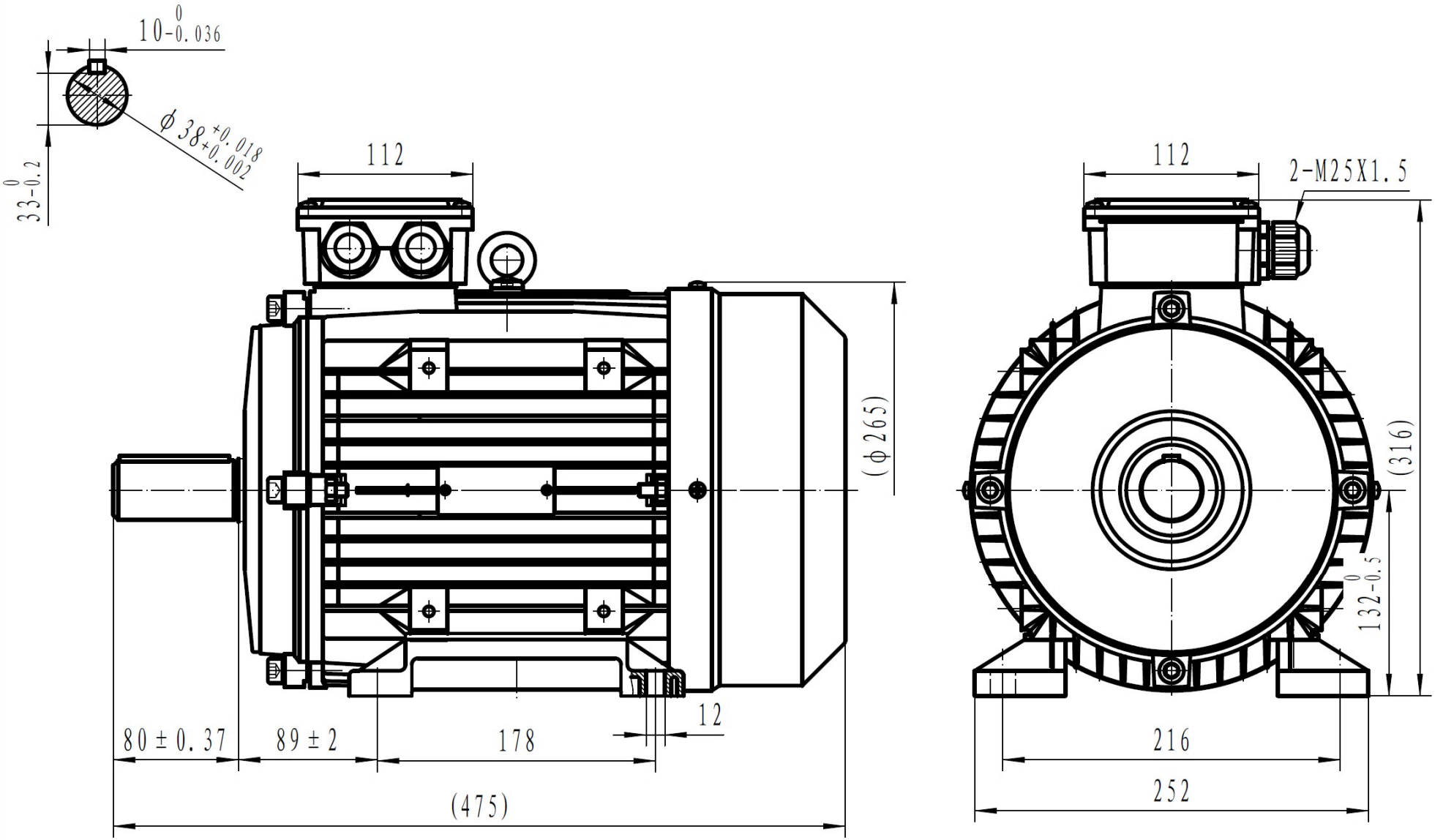
10-0.036 0
Φ38+0.018 +0.002
33-0.2 0
112
(Φ265)
80 ± 0.37
89 ± 2
178
12
(475)
112
2-M25X1.5
(316)
132-0.5 0
216
252

MS 132M-4 B3